Ipadmini has no backlight

After repairing a customer's iPadmini generation machine, the customer described the fault as the touch screen was broken. When changing the screen, the battery was not burned.
Disassemble the machine to the display panel Test Diode Value(Multimeter uses diode gear, red pen connect GND, black measurement test point) and find that the backlight VCC has an infinity value.Looking for the connection insurance Inductor L2200 along the row of seats, the end of the Test Diode Value(Multimeter uses diode gear, red pen connect GND, black measurement test point) Inductor has a value of infinity.Placed under the microscope to observe that the Inductor has been burned, and the three feet diode value on the Inductor Test Diode Value(Multimeter uses diode gear, red pen connect GND, black measurement test point) row seat are replaced.Connect screen power-on test, fault repair.




Li-ion
0.325
V
DC
RANGE
MIN MAX
HOLD

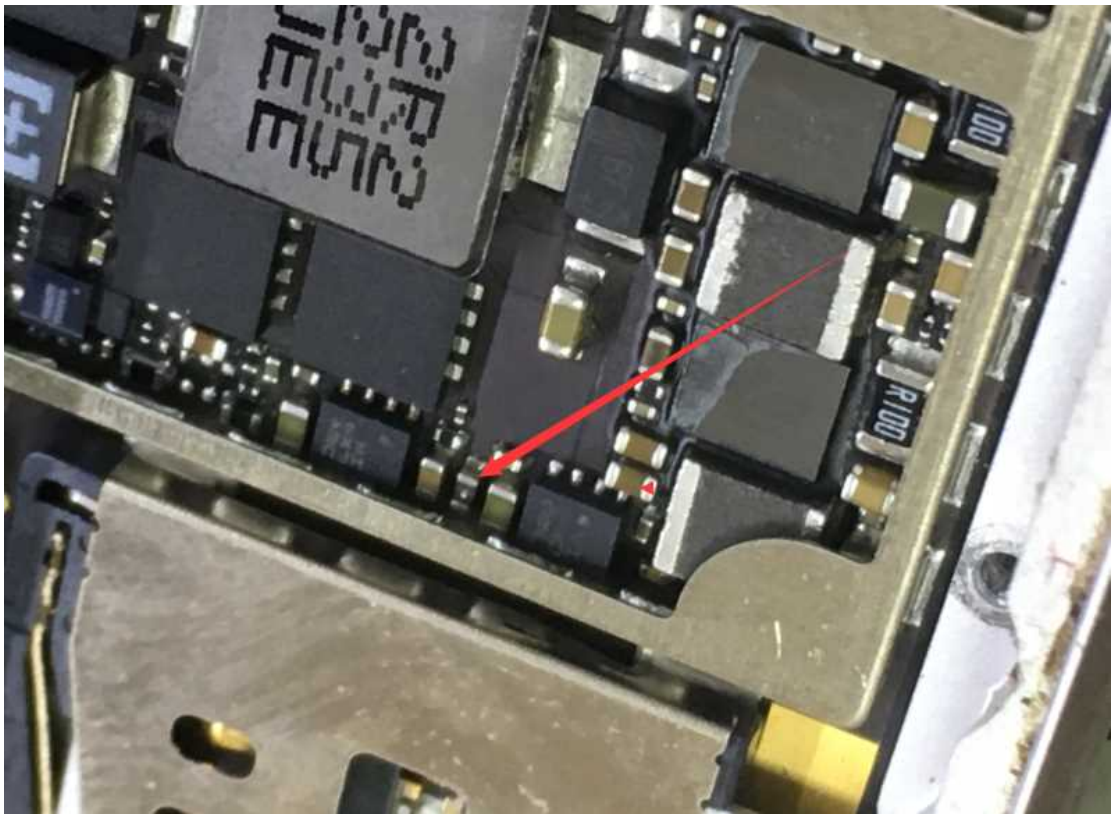

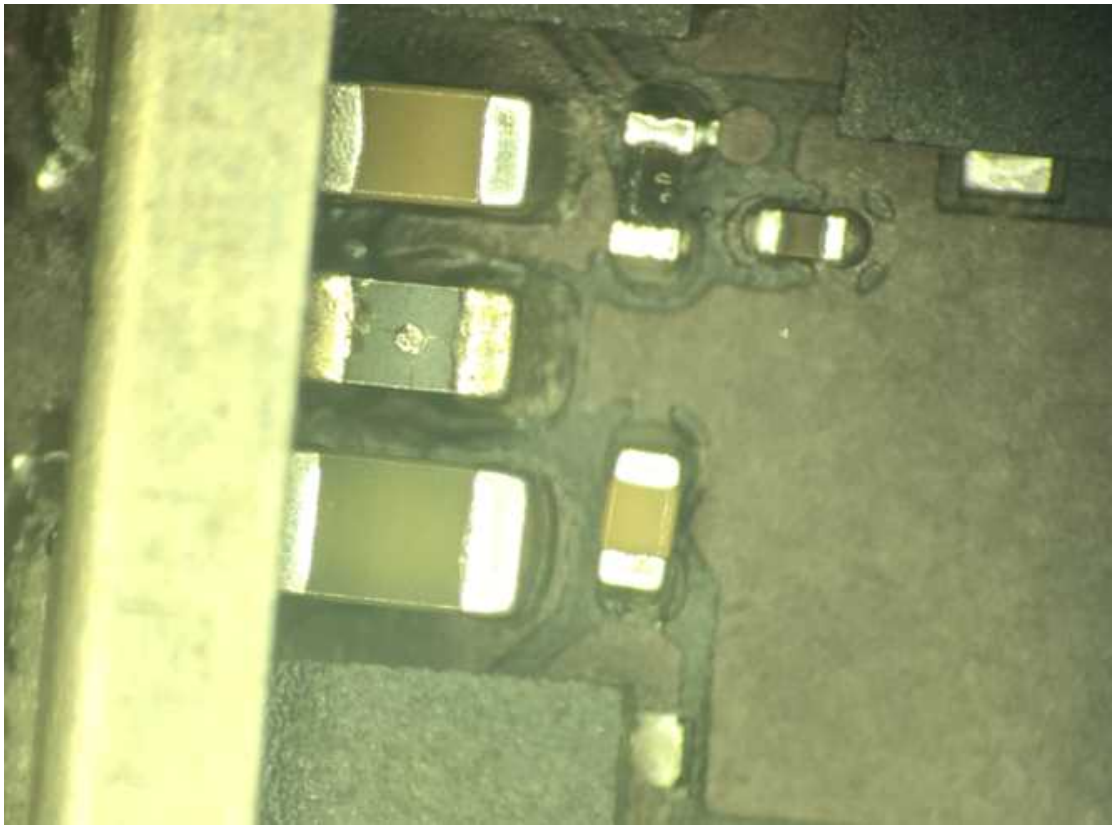

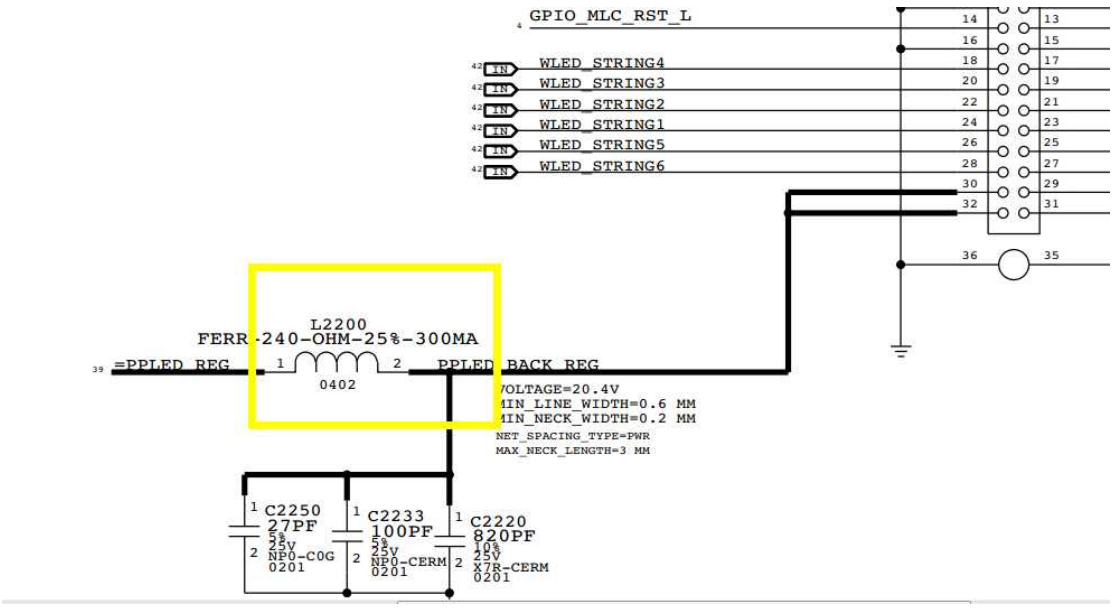
GPIO_MLC_RST_L
WLED_STRING4
WLED_STRING3
WLED_STRING2
WLED_STRING1
WLED_STRING5
WLED_STRING6
L2200
FERR-240-OHM-25%-300MA
0402
=PPLED_REG
PPLED_BACK_REG
VOLTAGE=20.4V
MIN_LINE_WIDTH=0.6 MM
MIN_NECK_WIDTH=0.2 MM
NET_SPACING_TYPE=PWR
MAX_NECK_LENGTH=3 MM
C2250
27PF
5%
25V
NP0-C0G
0201
C2233
100PF
5%
25V
NP0-CERM
0201
C2220
820PF
10%
25V
X7R-CERM
0201

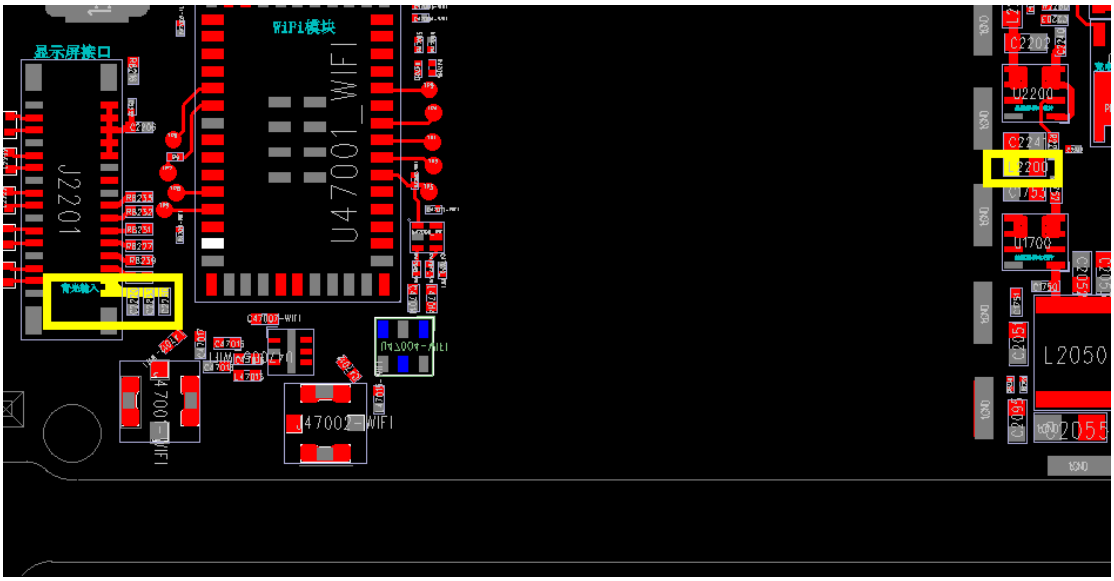
显示屏接口
WiPi模块
J2201
U4700_WIFI
U2200
U1700
L2050